SCALA1 3-25, 5-25

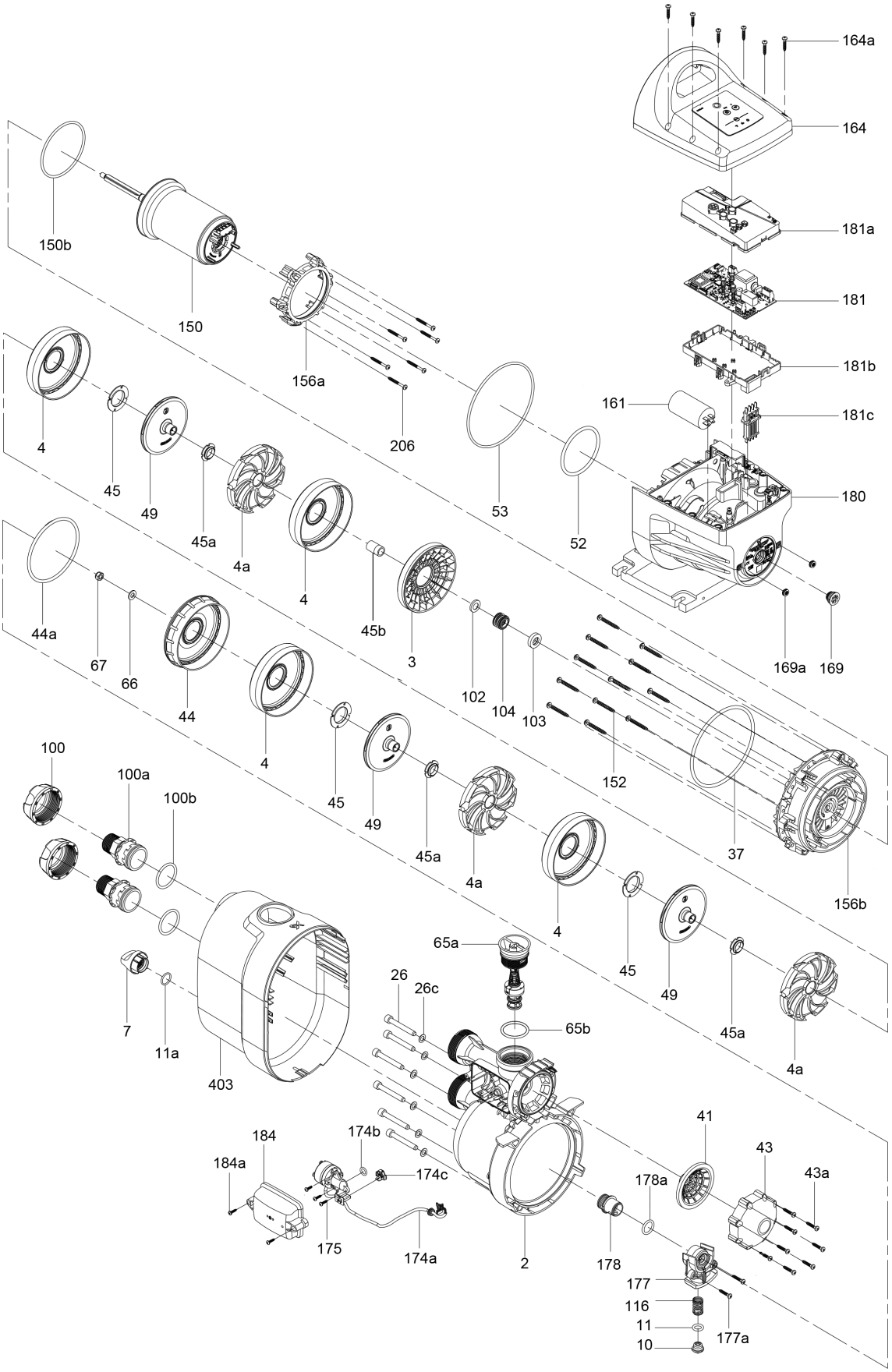

SCALA1 3-35, 3-45, 5-55

